DATASHEET

2MP HD LightHunter IR VF Bullet Network Camera

IPC2322SB-DZK-I0

Key Features

- High quality image with 2MP, 1/2.8"CMOS sensor
- 2MP (1920*1080)@30/25fps; 720P (1280*720)@30/25fps
- Ultra 265, H.265, H.264, MJPEG
- LightHunter technology ensures ultra-high image quality in low illumination environment
- 120dB true WDR technology enables clear image in strong light scene
- Support 9:16 Corridor Mode
- Alarm:1 in/1 out, Audio: 1 in/1 out
- Smart IR, up to 50m (164ft) IR distance
- Supports 256 G Micro SD card
- IK10 vandal resistant
- IP67 protection
- Support PoE power supply

Specifications

	IPC2322SB-DZK-I0				
Camera					
Sensor	1/2.8", 2.0megapixel, progressive scan, CMOS				
Lens	2.7 ~ 13.5mm, AF automatic focusing and motorized zoom lens				
DORI Distance	Lens (mm)	Detect (m)	Observe (m)	Recognize (m)	Identify (m)
	2.7	41.9	16.8	8.4	4.2
	13.5	209.5	83.8	41.9	20.9
Angle of view (H)	121.36° ~ 33.51°				
Angle of View (V)	58.4° ~ 14.9°				
Angle of View (O)	139.9° ~ 33.4°				
Adjustment angle	Pan: 0° ~ 360°	Tilt: 0° ~ 90°	Rotate: 0° ~ 360°		
Shutter	Auto/Manual, shutter time: 1 ~ 1/100000s				
Minimum Illumination	Colour: 0.0005Lux (F1.2, AGC ON) 0Lux with IR on				
Day/Night	IR-cut filter with auto switch (ICR)				
S/N	>52 dB				
IR Range	Up to 50m (164ft) IR range				
Wavelength	850nm				
IR On/Off Control	Auto/Manual				
Defog	Digital Defog				
WDR	120dB				
Video					
Video Compression	Ultra 265, H.265, H.264, MJPEG				
H.264 code profile	Baseline profile, Main profile, High profile				
Frame Rate	Main Stream: 2MP (1920*1080), Max 30fps; 720P (1280*720), Max 30fps; Sub Stream: 720P (1280*720), Max 30fps; D1 (720*576), Max 30fps; 640*360,Max 30fps; 2CIF(704*288), Max 30fps; CIF(352*288), Max 30fps; Third Stream: D1 (720*576), Max 30fps; 640*360,Max 30fps; 2CIF(704*288), Max 30fps; CIF(352*288), Max 30fps;				
Video Bit Rate	128 Kbps~16 Mbps				
9:16 Corridor Mode	Supported				
OSD	Up to 8 OSDs				
Privacy Mask	Up to 4 areas				
ROI	Up to 8 areas				
Motion Detection	Up to 4 areas				
Image					
White Balance	Auto/Outdoor/Fine Tune/Sodium Lamp/Locked/Auto2				
Digital Noise Reduction	2D/3D DNR				
Smart IR	Support				
Flip	Normal/Vertical/Horizontal/180°/90°Clockwise/90°Anti-clockwise				
Dewarping	N/A				
HLC	Support				
BLC	Support				

Audio	
Audio Compression	G.711
Two-way Audio	Supported
Suppression	Supported
Sampling Rate	8KHZ
Storage	
Edge Storage	Micro SD, up to 256GB
Network Storage	ANR, NAS(NFS)
Network	
Protocols	IPv4, IGMP, ICMP, ARP, TCP, UDP, DHCP, PPPoE, RTP, RTSP, RTCP, DNS, DDNS, NTP, FTP, UPnP, HTTP, HTTPS, SMTP, 802.1x, SNMP, QoS
Compatible Integration	ONVIF (Profile S, Profile G, Profile T), API
Client	EZStation EZView EZLive
Web Browser	Plug-in required live view: IE9+, Chrome 41 and below, Firefox 52 and below
	Plug-in free live view: Chorme 57.0+, Firefox 58.0+, Edge 16+, Safari 11+
Interface	
Audio I/O	1 Input: impedance 35kΩ; amplitude 2V [p-p]
	1 Output: impedance 600Ω; amplitude 2V [p-p]
Alarm I/O	1/1
Network	1 RJ45 10M/100M Base-TX Ethernet
Certifications	
Certifications	CE: EN 60950-1 UL: UL60950-1 FCC: FCC Part 15
General	
Power	DC 12V±25%, PoE (IEEE 802.3af)
	Power consumption: Max 8.5W
Dimensions (L × W × H)	245.4 × 85.4 × 86.4mm (9.7” × 3.4” × 3.4”)
Net Weight	0.92kg (2.03lb)
Material	Metal
Working Environment	-30°C ~ 60°C (-22°F ~ 140°F), Humidity: ≤95% RH (non-condensing)
Strorage Environment	-30°C ~ 60°C (-22°F ~ 140°F), Humidity: ≤95% RH (non-condensing)
Surge Protection	6KV
Ingress Protection	IP67
Vandal Resistant	IK10
Reset Button	N/A

Dimensions

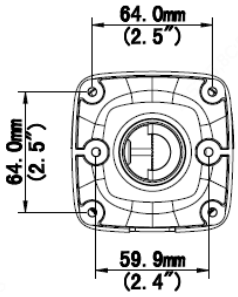

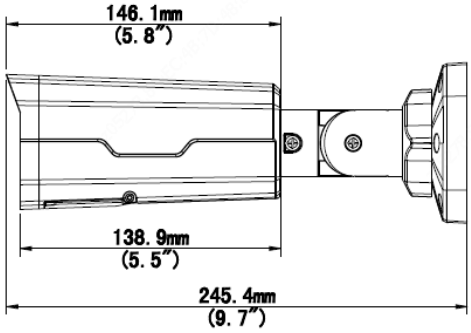

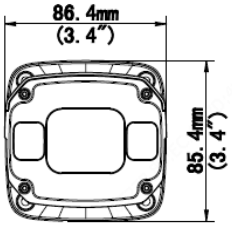

Accessories

TR-JB07-D-IN

TR-JB06-A-IN

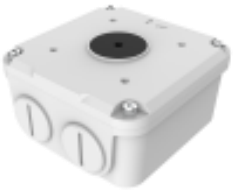

TR-UP06-B-IN

TR-UP06-C-IN

TR-A01-IN

Junction Mount	Pole Mount
TR-JB07-D-IN(TR-JB06-A-IN)+ TR-UP06-C-IN	TR-UP06-B-IN
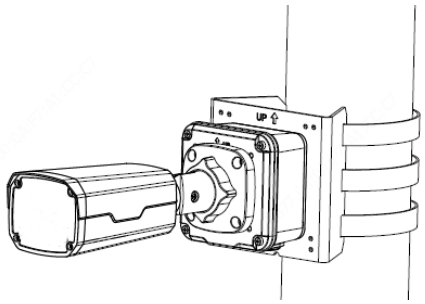	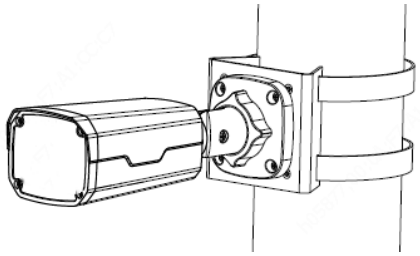

Zhejiang Uniview Technologies Co., Ltd.

Building No.10, Wanlun Science Park, Jiangling Road 88, Binjiang District, Hangzhou, Zhejiang, China (310051)

Email: overseasbusiness@uniview.com; globalsupport@uniview.com

http://www.uniview.com

©2020 Zhejiang Uniview Technologies Co., Ltd. All rights reserved.

*Product specifications and availability are subject to change without notice.